ISSN 2395-1621

Geometry Modification of a Two Wheeler Crankshaft for the Mass Reduction

#1Vaibhav V. Dighe, #2Shripad R. Nimbalkar

#12Pravara Rural Engineering College Loni, Savitribai Phule University Pune, Pune, India.

ABSTRACT

The crankshaft is an important component of internal combustion engine having complex geometry that converts linear reciprocating displacement of the piston into rotary motion. The main objective of this work is mass reduction of forged crankshaft used in single cylinder four stroke engine of two wheeler vehicle. This study consists of two major sections, Finite Element Analysis and design modification for mass reduction of a crankshaft. Design modification of the crankshaft can be done by considering the type, location and peak value of stresses. Crank web thickness and crankpin diameter are the suggested design modification parameters in current work to reduce the mass of the crankshaft. The main work is to model the crankshaft with dimensions and then simulate the crankshaft for static structural and fatigue analysis. Three dimensional model of the crankshaft is developed in CATIA v5 and imported to HYPERMESH v11.0 for strength analysis. Strength analysis of crankshaft is done for maximum loading condition. Simulation inputs are taken from engine specification chart. The load is applied to the finite element model of crankshaft in HYPERMESH and boundary conditions were applied according to engine mounting conditions. The fatigue life of the crankshaft is predicted by using FEMFAT 5.0 Fatigue software. The validation of model is compared with the experimental and FEA results of Von-misses stresses.

***Keywords*— Crankshaft, finite element analysis (FEA), HYPERMESH v11.0 Software, Static Analysis.**

ARTICLE INFO

Article History

Received :18th November 2015

Received in revised form :

19th November 2015

Accepted : 21st November , 2015

Published online :

22nd November 2015

I. INTRODUCTION

Crank shaft is a large component with a complex geometry in the i.c engine, which converts the reciprocating displacement of the piston to a rotary motion with a four bar link mechanism. Crankshaft consisting of shaft parts, two journal bearings and one crankpin bearing. Crankshaft experiences large forces from gas combustion. This force is applied to the top of the piston and since the connecting rod connects the piston to the crank shaft, the force will be transmitted to the crankshaft. The magnitude of the forces depends on many factors which consist of crank radius, connecting rod dimensions and weight of the connecting rod, piston, piston rings, and pin. Combustion and inertia forces acting on the crankshaft produces torsional load and bending load. Crankshaft must be strong enough to take the downward force of the power stroke without excessive bending so the reliability and life of the internal combustion engine depend on the strength of the crankshaft largely. Bending moment causes tensile and compressive stresses while twisting moment causes shear stress. There are many sources of failure in the engine one of the most common crankshaft failure is fatigue at the fillet areas due to the bending load causes by the combustion. At the root of the fillet areas stress concentrations exist and these high stress range locations are the points where cyclic loads could cause fatigue crank initiation leading to fracture. Fillet rolling can increase fatigue life of internal combustion engine mechanism.

II. LITERATURE

Amit solanki et al. Present static simulation conducted on a crankshaft of single cylinder 4- stroke diesel engine. The

analysis is done for finding critical location in crankshaft. Stress variation over the engine cycle and the effect of torsion and bending load in the analysis are investigated. [1] xiaoping chen etal. Present the rational experimental method which is employed to study the crankshaft fatigue phenomenon based on a customized experiment platform, mimicking the real-world crankshaft working condition physically. Then, based on the experiment data, the statistical regression analysis of eight commonly used hypothesis distributions is conducted. [2] rajesh m.metkar et al. Presents comparative studies of two methods of fatigue life assessment of a single cylinder diesel engine crankshaft by using fracture mechanics approach viz. Linear elastic fracture mechanics (lefm) and recently developed critical distance approach (cda). [3] k. Thriveni et al. This paper to study the static analysis on a crankshaft from a single cylinder 4-stroke i.c engine. The validation of model is compared with the theoretical and fea results of von-misses stress and shear stress are within the limits. [4] momin muhammad zia et al. Present results of strength analysis done on crankshaft of a single cylinder two stroke petrol engine, using pro/e and ansys software. The reduction in mass obtained by design modification is 38%. [5] rajesh mallikarjun madbhavi et al. Present work analysis conducted on forged micro alloy steel crankshaft. This crankshaft is used in new tata safari 2.2 l dicor vehicle. In this study a static analysis is conducted on this crankshaft, with single crankpin of crankshaft. [6] mahesh l. Raotole et al. Studied to get the life estimation of crankshaft using finite element method. This study consists of three major sections: (1) dynamic load analysis, (2) fem and stress analysis, (3) prediction of fatigue life for crankshaft. [7] r. J. Deshbhratar et. Al present the modal analysis of a 4-cylinder crankshaft is discussed using finite element method. The analysis is done on two different materials which are based on their composition. [8] gul cevik et al. Summarizes an investigation of the effect of fillet rolling on fatigue behavior of a ductile cast iron crankshaft used in diesel engine applications. [9] k.s. Choi et al. Present the non-associated flow rule proposed by him for pressure-sensitive materials under cyclic loading conditions is employed in a two-dimensional finite element analysis of a crankshaft section under fillet rolling and subsequent bending. [10] xuanyang lei et al. Presents method for simulating nonlinear motion of cracked crankshaft is proposed and the transient vibration response of a cracked crankshaft is evaluated and analyzed. [11] osman asi et al. Describes the failure analysis of a diesel engine crankshaft used in a truck, which is made from ductile cast iron. [12] changli wang et al. Present the failure crankshaft model rd8t, of a bulldozer tcm-175b. [13] yuan kang et. Al technique for the improvement of accuracy in balancing crankshafts. [14] zhiwei yu et al. Presents failure investigation has been conducted on a diesel. Presents study which is based on a modified influence coefficient method associated with multi-plane -engine crankshaft used in a truck, which is made from 42crmo forging steel. [15] f.s. Silva et al.present the report on investigation that was carried out on two diesel van damaged **crankshafts. [16]**

III. OBJECTIVES

To modify the geometry of the existing crankshaft to reduce its mass while improving or maintaining its structural integrity/ performance.

Steps to reach the objective:

- Study the existing crankshaft design.
- Benchmark the fatigue life using historic data.
- Conduct the static stress analysis of existing crankshaft by using finite element method and experimentation.
- Depending on the stress results, identify the area of research to be addressed.
- Determine the best alternatives for the existing crankshaft by design modification in existing crankshaft.
- Rationalize the design by revising the design in crankpin or crank web.
- Conduct the FEA for the modified crankshaft configuration and determine the results.
- Compare the results with benchmark determined earlier.
- Use universal testing machine set up with a suitable prototype for testing.
- Conduct the experimentation on the existing crankshaft for giving boundary conditions.
- Compare the FEA and experimentation results of the existing crankshaft for validation.

IV. FINITE ELEMENT ANALYSIS

Assumptions for Linear Static Analysis

- Deflections should be small relative to structure.
- Material should be linear elastic.
- Boundary conditions should be constant i.e. crankshaft ends are constrained to carry out linear static analysis at maximum load.
- Analysis is done for constant load.
- Equilibrium conditions, Σ Forces = 0 and ΣMoments =

General description of FEA

The basis of FEA relies on the decomposition of the domain into a finite number of sub-domains (elements) for which the systematic approximate solution is constructed by applying the variation or weighted residual methods. In effect, FEA reduces problem to that of a finite number of unknowns by dividing the domain into elements and by expressing the unknown field variable in terms of the assumed approximating functions within each element. These functions (also called interpolation functions) are defined in terms of the values of the field variables at specific points, referred to as nodes. The finite element method is a numerical procedure that can be used to obtain solutions to a large class of engineering problems involving stress analysis, heat transfer, electro-magnetism, and fluid flow.

Finite element geometry

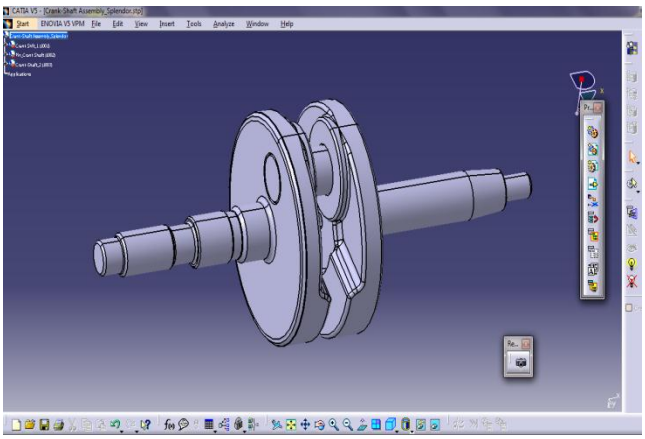

Fig. 1 Catia model of crankshaft

Dimensions of crankshaft

TABLE 1: DIMENSIONS OF CRANKSHAFT

Sr No.	Parameter	Benchmark	Optimised
1	Crankpin outer diameter	19	19
2	Crankpin inner diameter	0	10
3	Crankpin length	40	40
4	Web thickness	16	15
5	Length	214	214

The procedure of using FEM usually consists of following steps: (a) Meshing (b) Material (c) Determining and imposing loads and boundary conditions; (d) Result analysis.

a. Meshing: Greater the fineness of the mesh better the accuracy of the results. The mesh size is 3mm. The meshed model in Hypermesh consisting of 15790 nodes and 68281 elements.

b. Material: The material used for crankshaft is 42Cr4Mo4.The material properties are listed in TABLE 2.

TABLE 2: MATERIAL PROPERTIES

Sr no	Parameter	Value	Unit
1	Elastic Modulus (E)	210000	MPa
2	Ultimate Strength (Sut)	827	MPa
3	Density (ρ)	7890	Kg/m^3
4	Poisson's Ratio (μ)	0.29	-
5	Yields Strength (Syt)	625	MPa
6	Fatigue Strength (S)	400-950	MPa

c. Maximum gas force calculation:

Density of Petrol (C8H18),

ρ = 750 Kg/m3 = 750 * 10 -9 Kg/mm3

Operating Temperature, T = 293.15 K

Mass = Density * Volume

m = 750 *10-9 * 97.2x103

m= 72.9*10-3 Kg

Molecular weight of petrol, M = 114.228*10-3 Kg/mole

Gas constant for petrol,

R = 8314.3 / 114.228x10-3

R = 72.79 * 103 J/Kg.mol.K

From Gas law equation

PV = mRT

P = mRT/V

= 72.9*10 3*72.79*10 3*293.15/ (97.2*10 3)

P = 16 MPa

Gas Force = Pressure x Cross section area of piston

Fp = P * π/4 * D2

= 16* π/4*502

Fp = 31415.93 N

To carry out static analysis of crankshaft the two ends of the crankshaft are to be fixed.To calculate the bending moment considers the case of beam fixed at both ends with a center point load. Maximum gas Force F is calculated for maximum loading conditions using maximum cylinder pressure and bore diameter of engine cylinder which is 31.5KN. This gas force is applied on the crankpin.

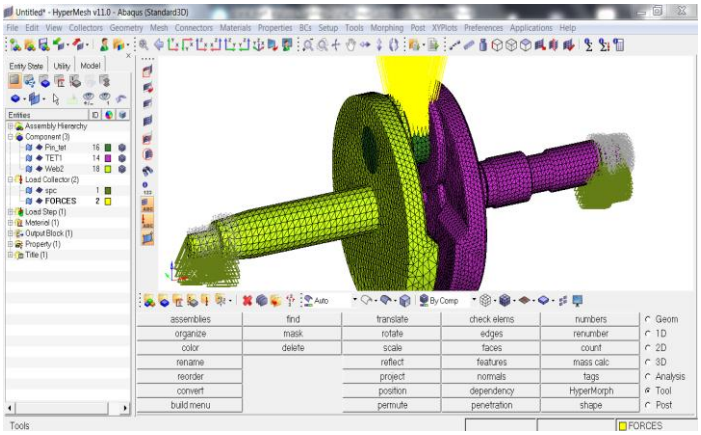

Fig.2.Loads and boundary conditions

d. FEA Results and Discussion

TABLE 3 FEA RESULT AND DISCUSSION

Crankshaft	Crank web thickness	Crankpin diameter (mm)		Von mises stress (MPa)	Deformation (mm)	fatigue Life (No of cycles)	Mass (kg)
		External	Internal				
Benchmark	16	19	0	592	0.67	$6*10^6$	1.73
Modified	15	19	10	670	0.71	$2*10^6$	1.62

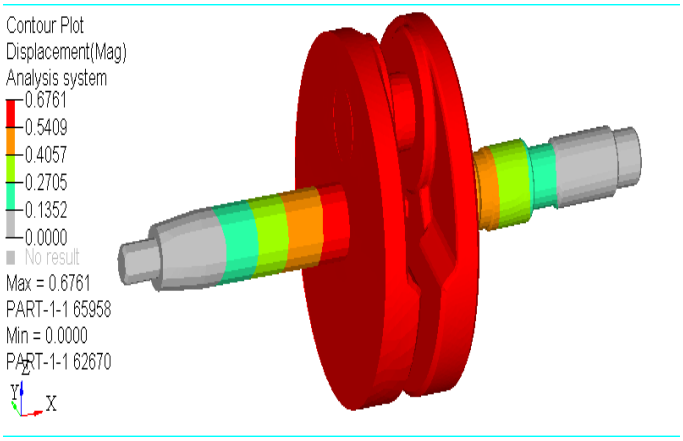

Fig.3. Displacement plot of benchmark crankshaft

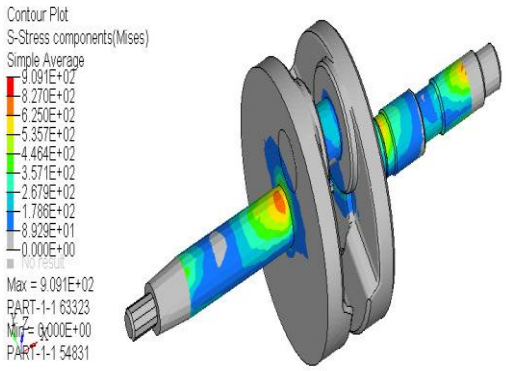

Fig. 4Von mises stress plot of benchmark crankshaft

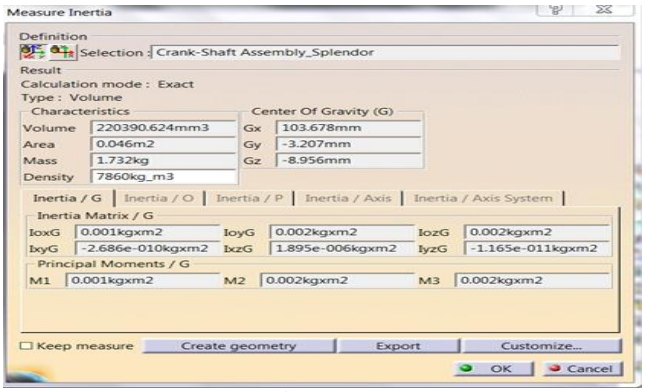

Fig. 5 Mass of benchmark geometry

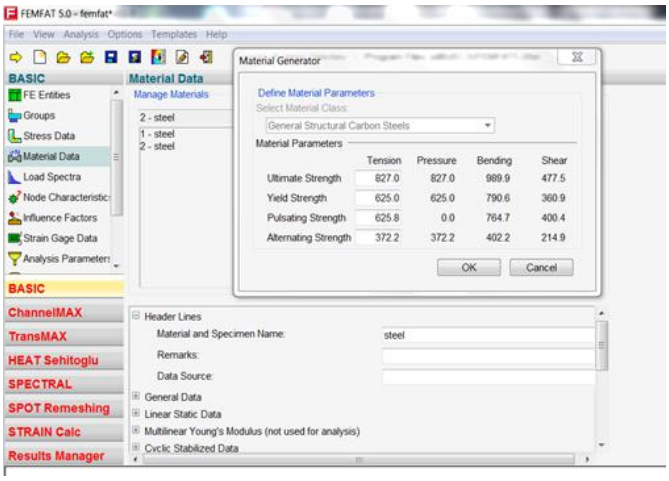

Fig. 6 Inputs to FEMFAT 5.0

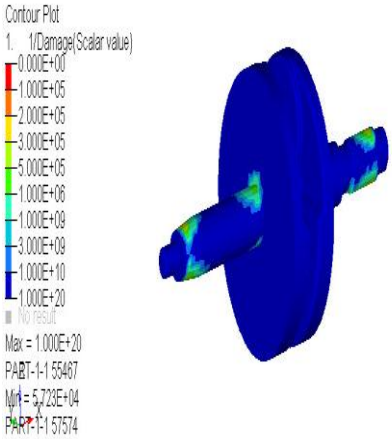

Fig. 7Fatigue life plot of benchmark crankshaft

From finite element analysis of benchmark crankshaft it is found out that the von mises stress induced in crankshaft is 592 MPa which is less than material fatigue strength value. The maximum stress is observed at the crankshaft ends which is due to the ends are constrained. So there is scope to optimize the design of crankshaft to reduce the mass and manufacturing cost. Modified crankshaft is obtained by reducing crank web thickness and crankpin diameter whose dimensions are given in table 3.

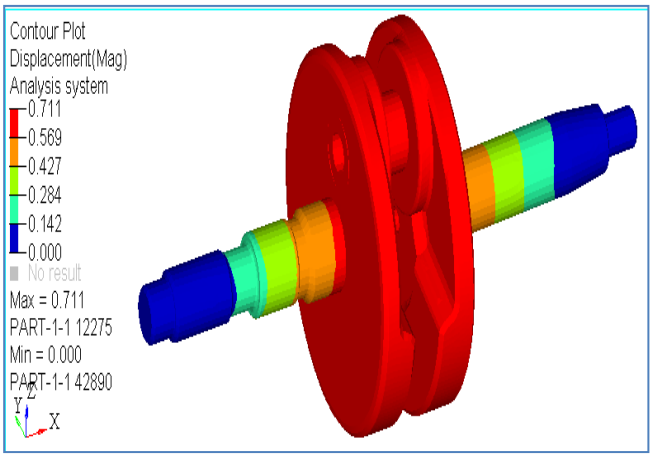

Fig. 8Displacement plot of modified crankshaft

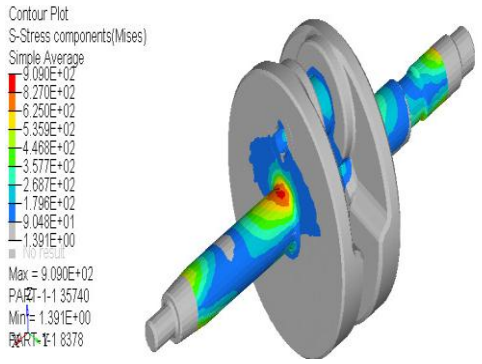

Fig. 9Von mises stress plot of modified crankshaft

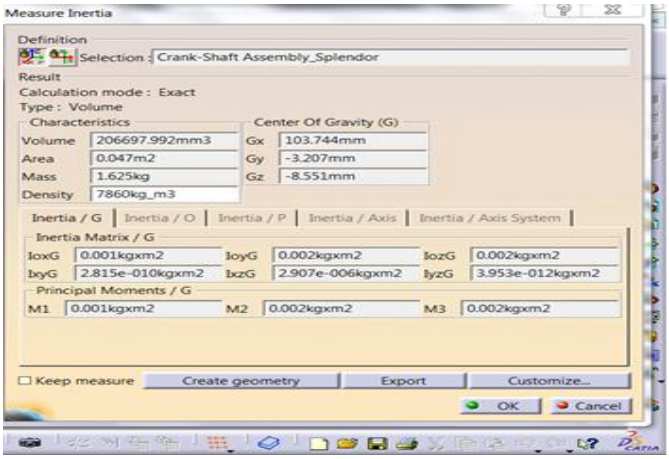

Fig. 10Mass of modified crankshaft

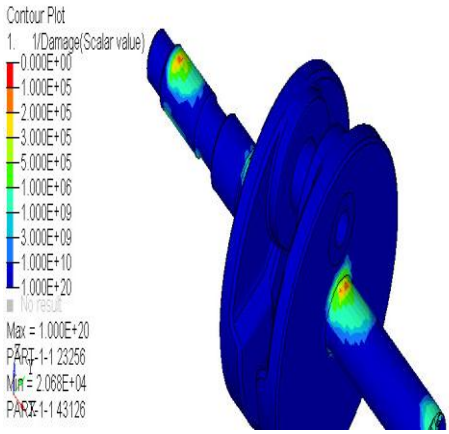

Fig. 11Fatigue life plot of modified crankshaft

After finite element analysis of modified crankshaft it is found out that von mises stress induced in crankshaft are within limit hence the design is safe.

Percentage mass reduction of crankshaft

= [(Original mass- modified mass) / Original mass] * 100

= [(1.732 – 1.625) / 1.732] *100

= 6.17%

V.EXPERIMENTATION FOR VALIDATION

Experimentation has done for benchmark crankshaft on universal testing machine.

Testing procedure: The crankshaft is mounted to fixture plate. The mounting bracket with V clamps at both ends support the crankshaft. The crankshaft with connecting rod, bearing, sprockets is mounted with assembly. The load is distributed as per the engine mounting condition. The adaptor is used at the piston position with the help of screws. The adaptor exerts same compressive load as that of engine gas force i.e. 31500 N. The total assembly is kept at zero degree of freedom as assume the top dead center position of the piston.

Comparison of results as below in table 4.

TABLE 4 COMPARISON OF FEA AND EXPERIMENTATION RESULT OF BENCHMARK GEOMETRY

Sr No	Parameter	FEA	Experimental	% Variation
1	Von mises stress (MPa)	592	535	9.62
2	Deformation (mm)	0.711	0.695	2.25

VI. CONCLUSION.

The Experimental results were compared with FEA and the results show good agreement with test results. The value of von-misses stresses that comes out from the analysis is within fatigue strength limit so proposed design is safe. It can be observed from FEA results as mass of crankshaft is reduced the fatigue life is also reduced but since 10^6 is considered to be safe fatigue life for crankshaft. Hence the modified crankshaft is safe from fatigue life point of view. Geometry modification resulted in 6.17% mass reduction of forged crankshaft which is achieved by changing crankpin and crank web dimensions. As the mass of the crankshaft is decreased that will decrease the cost of the crankshaft.

ACKNOWLEDGEMENT

The support extended by the guide Prof. S.R Nimbalkar and college authorities is highly appreciated and acknowledged with due respect.

REFERENCES

[1] Amit Solanki, Jaydeepsinh Dodiya, “Design and Stress Analysis of Crankshaft for Single Cylinder 4-Stroke Diesel Engine”, International journal for research in applied science and engineering technology, ISSN: 2321-9653, Vol. 2 Issue V, May 2014.

[2] Xiaoping Chen, Xiaoli Yu, Rufu Hu, Jianfeng Li, “Statistical distribution of crankshaft fatigue: Experiment and Modeling”, International Conference on Engineering Failure Analysis, ISSN I350-6307, 10 April 2014.

[3] Rajesh M.Metkar, Vivek K. Sunnapwar, Subhash Deo Hiwase, Vidya Sagar Anki, Mahendra Dumpa,

"Evaluation of FEM based fracture mechanics,technique to estimate life of an automotive forged steel crankshaft of a single cylinder diesel engine", Chemical, Civil and Mechanical Engineering Tracks of 3rd Nirma University International Conference, Procedia Engineering 51 Page No. 567–572, 2013.

[4] K. Thriveni, Dr.B.JayaChandraiah, "Modeling and Analysis of the Crankshaft Using Ansys Software", International Journal of Computational Engineering Research Vol- 03, Issue, 5.6.

[5] Momin Muhammad Zia Muhammad Idris, International Journal of Engineering Research and Applications (IJERA), "Crankshaft Strength Analysis Using Finite Element Method" ISSN: 2248-9622, Vol. 3, Issue 1, January -February 2013, pp.1694-1698.

[6] Rajesh Mallikarjun Madbhavi & Tippa Bhimasankara Rao, Global Journal of Researches in Engineering, Mechanical and Mechanics Engineering, "FEA of the Forged Steel Crankshaft by Hyper mesh" ISSN: 2249-4596, Volume 13, Issue 4, Version 1.0 Year 2013.

[7] Mahesh L. Raotole, Prof. D. B. Sadaphale, Prof. J. R.Chaudhari," International Journal of Emerging Technology and Advanced Engineering", " Prediction of Fatigue Life of Crank Shaft using S-N Approach" ISSN 2250-2459, ISO 9001:2008 Certified Journal, Volume 3, Issue 2, February 2013.

[8] R. J. Deshbhratar, Y. R. Suple, "International Journal of Modern Engineering Research (IJMER)", "Analysis & Optimization of Crankshaft Using Fem", ISSN: 2249-6645, Vol. 2, Issue. 5, Sep. -Oct. 2012, page no. -3086-3088.

[9] Gul Cevik, Rıza Gurbuz, "Evaluation of fatigue performance of a fillet rolled diesel engine crankshaft" Engineering Failure Analysis 27 (2013) 250–261.

[10] K.S. Choi, J. Pan, "Effects of pressure-sensitive yielding on stress distributions in crankshaft sections under fillet rolling and bending fatigue tests", International Journal of Fatigue 31 (2009) 1588–1597.

[11] Xuanyang Leia, Guicai Zhanga, Song Xigengb, Jin Chena, Guangming Dong, "Simulation on the motion of the crankshaft with a crack in crankpin-web fillet region" "Journal of Sound and Vibration ", 295 (2006) 890–905.

[12] Osman Asi, "Engineering Failure Analysis 13", "Failure analysis of a crankshaft made from ductile cast iron" 2006, page no. 1260–1267.

[13] Changli Wang, Chengjie Zhao, Deping Wang, "Engineering Failure Analysis 12", "Analysis of an unusual crankshaft failure" 2005, page no. 465–473.

[14] Yuan Kang, Ming-Hsuan Tseng, Shih-Ming Wang, Chih-Pin Chiang, Chun-Chieh Wang, "Mechanism and Machine Theory 38"`, "An accuracy improvement for balancing crankshafts" 2003, page no. 1449–1467.

[15] Zhiwei Yu, Xiaolei Xu, "Engineering Failure Analysis 12", "Failure analysis of a diesel engine crankshaft" 200, page no. 487–495.

[16] F.S. Silva, "Engineering Failure Analysis 10", "Analysis of a vehicle crankshaft failure" 2003, page no.605–616.